AQUANT
CONTEMPORARY BATHROOMS

Free Standing Brass Bath Basin Mixer With Brass Hand Shower

Product Code : **2027**

Technical Drawing

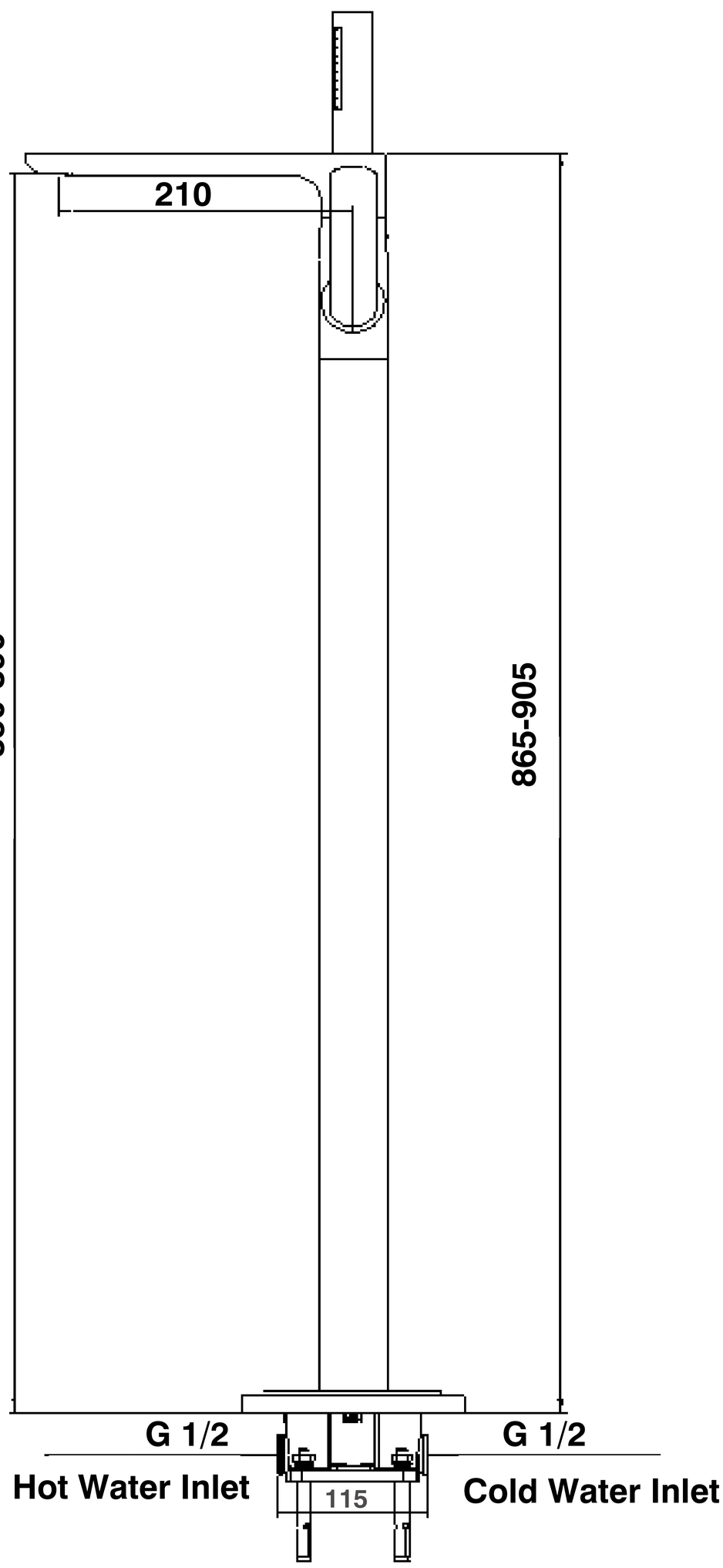

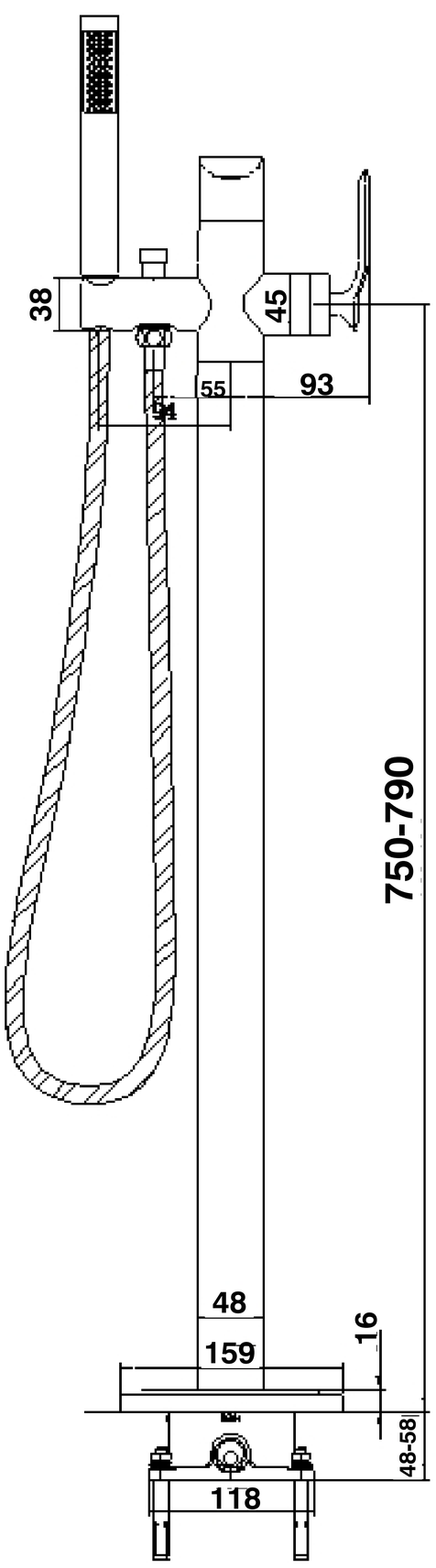

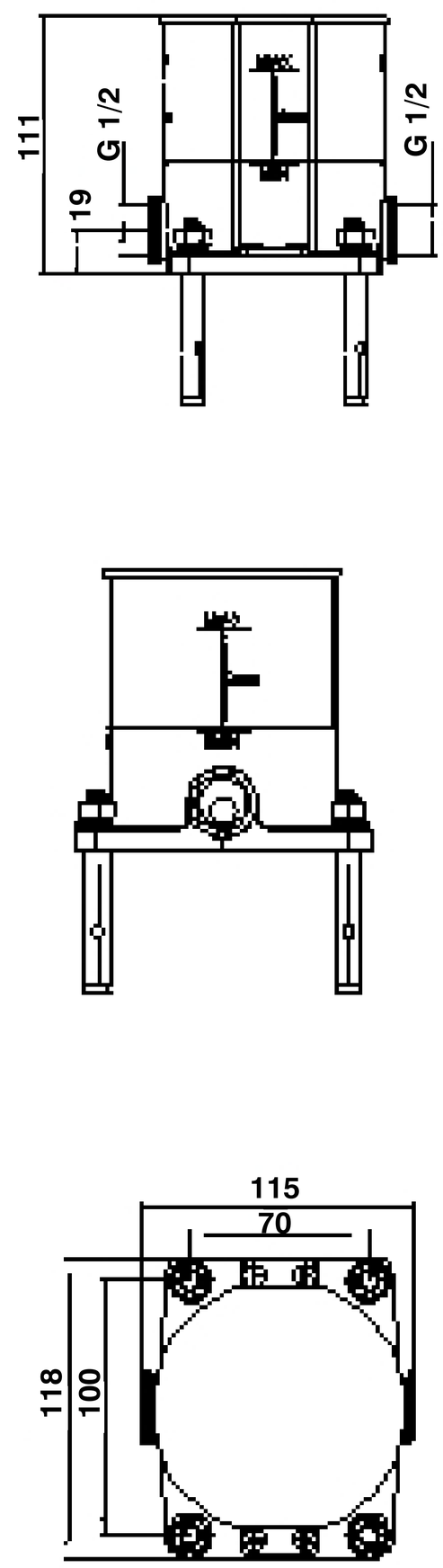

All dimension are in **mm**